AF2000 Air Fed Full Face Mask Parts List

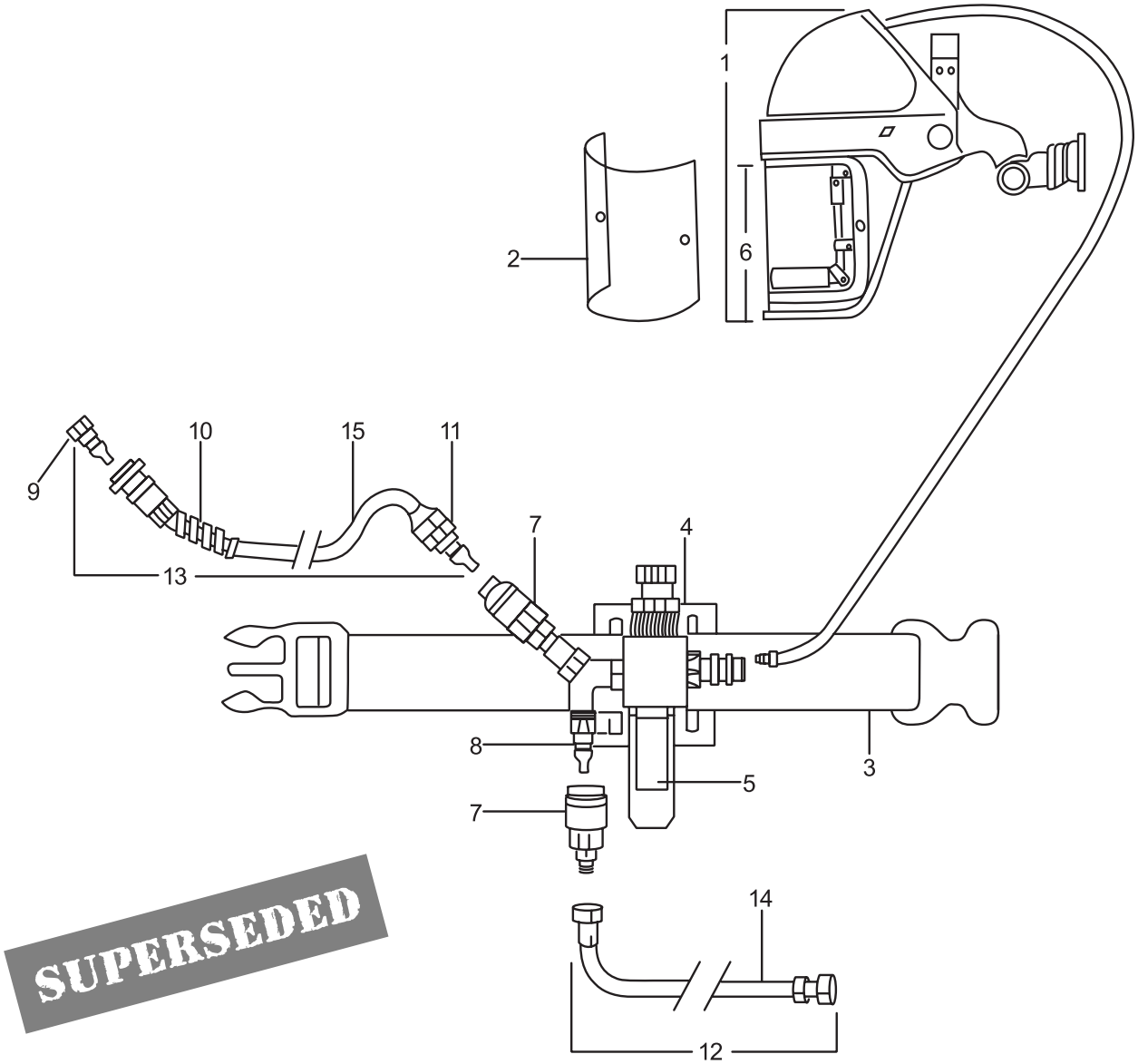

Item No.	Part No.	Description
1	AF2001	Full Face Airfed Browguard & Visor
2	AF2002K10	Visor Cover (10 pcs)
3	AF2003	Adjustable Waistbelt
4	AF2004	Pre Set Regulator (no QR fittings)
5	AF2006	Carbon Filter
6	AF2008	Visor with foam
7	L20SM	One Touch Lock Hi Cupla 200, 1/4" male thread
8	20PM	Hi Cupla Plug 1/4" male thread

Item No.	Part No.	Description
9	20PFF	Hi Cupla Plug 1/4" female parallel thread
10	250.85SNG	One Touch Plastic Hi Cupla 250 12x8 hose
11	85PN	Nut Cupla 200 Plus 12x8 hose
12	BH.10	10 metre Air Breath Hose (per metre)
13	GH.12	Spraygun Hose with QR fittings
14	33.10	10 mm IDAir Breath Hose (per metre)
15	SH8	8 mm ID Soft Pur Braided Hose (per metre)