AZ40HTE Spray Gun Parts List

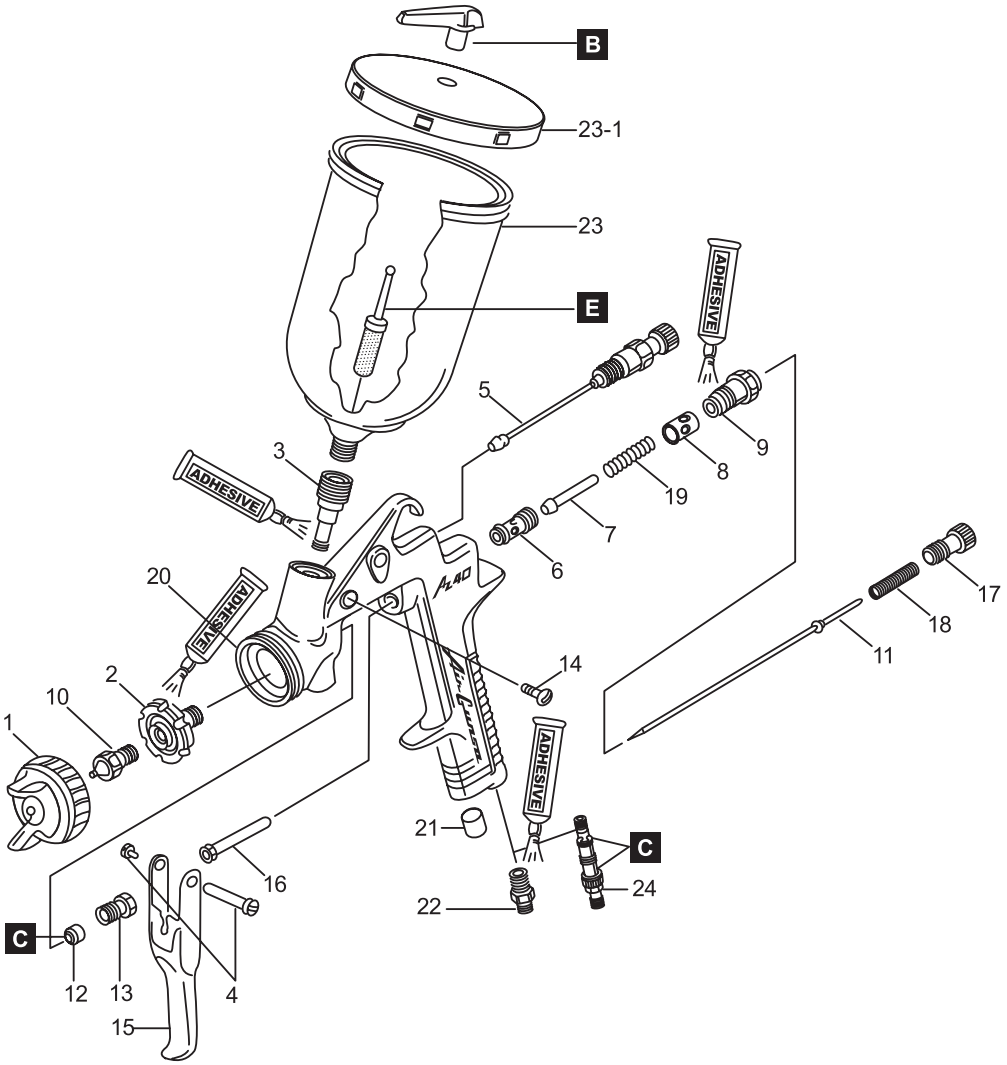

Item No.	Part No.	Description
1	2CAP40AG08	Air Cap 0.8 mm
1	2CAP40AG10	Air Cap 1.0 mm
1	2CAP40AG12	Air Cap 1.2 mm
1	2CAP40AG15	Air Cap 1.5 mm
1	2CAP40AG18	Air Cap 1.8 mm
1	2CAP40AG20	Air Cap 2.0 mm
2	2COM3008	Nozzle Holder
3	4COM5003	Threaded Bushing
4	4COM4008	Trigger Stud
5	2PAT40AG	Pattern Adjust Set
6	2SUB6006	Air Valve Seat Set
7	COM2004	Air Valve
8	2COM3006	Bushing
9	2SUB3012	Fluid Needle Guide
10 & 11	2ADU40AG08	Need / Nozz 0.8 mm
10 & 11	2ADU40AG10	Need / Nozz 1.0 mm
10 & 11	2ADU40AG12	Need / Nozz 1.2 mm

Item No.	Part No.	Description
10 & 11	2ADU40AG15	Need / Nozz 1.5 mm
10 & 11	2ADU40AG18	Need / Nozz 1.8 mm
10 & 11	2ADU40AG20	Need / Nozz 2.0 mm
12	2COM2006	Needle Packing
13	2COM3011	Needle Packing Nut
14	2COM5004	Screw
15	2COM6004	Trigger
16	2COM4000	Air Valve Shaft
17	2COM3007	Fluid Needle Adjust
18	2COM6002	Needle Spring
19	2COM6001	Air Valve Spring
23	PCG.2AG	200 ml Gravity Cup
23-1	2013130600	Lid Set PCG.2AG
24	2SUB6007	Air Control Valve
B	2502800500	Non-Drip Set 5pk
C	AZ40RSK	Service Kit
E	SEL.30	Gravity Filter 5pk